CORSAIR XENEON 27QHD240 OLED

QUICK START GUIDE

IN THIS GUIDE
- INTRODUCTION
- PRECAUTIONS
- PACKAGE CONTENTS
  - CORSAIR XENEON 27QHD240 OLED DISPLAY CONTENTS
- ASSEMBLY
- TILT, SWIVEL, PIVOT, AND HEIGHT ADJUSTMENT
- CONNECTIVITY
  - BACK SIDE
  - BOTTOM SIDE
- PROXIMITY SENSOR FOR OSD LOCATION INDICATOR
- OPERATIONS
  - CONTROLS
  - ON-SCREEN DISPLAY (OSD)
  - OSD - PICTURE
  - OSD - PIP/PBP (PICTURE-IN-PICTURE / PICTURE-BY-PICTURE)
  - OSD - OSD SETTING
  - OSD - SYSTEM SETTINGS
  - OSD - AUDIO
  - OSD - INPUT SOURCE
  - OSD - INFORMATION
  - VESA MOUNT COMPATIBILITY
- FAQ
- APPENDIX
  - TABLE 1: TECHNICAL SPECIFICATIONS
  - TABLE 2: SUPPORTED DISPLAY MODES
- ABOUT LOW BLUE LIGHT & FLICKER FREE
- HDMI LEGAL DISCLOSURE

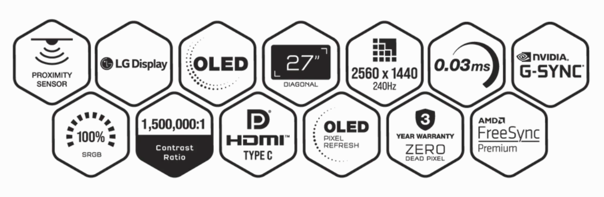

INTRODUCTION

Product Setup, User Information, and Warranty/Dead Pixel policy can be found at Customer Service – Corsair Landing Page

PRECAUTIONS

- Only use the accessories that are provided with the monitor or that recommended by the manufacturer.
- Keep the plastic packaging bag for the product in a place that cannot be reached by children.
- Before connecting the monitor to the power outlet, make sure that the voltage rating of the power cable is compatible with the power specification in the country where you are located.
- The power cord plug must be connected to a properly wired and grounded power outlet.
- Do not touch the plug with wet hands, otherwise can easily cause electric shock.
- Place the monitor in a stable and well-ventilated place.
- Do not place the monitor near any heat sources such as electric radiators or direct sunlight.
- The holes or openings on the monitor are for ventilation. Do not cover or block the ventilation holes with any objects.
- Do not use the monitor near water, drinks, or any type of liquids. Failure to do so may result in electric shock or damage to the monitor.
- Make sure to unplug the monitor from the power outlet before cleaning.
- As the screen surface can be easily scratched, avoid touching the surface with any hard or sharp object. Use a soft lint-free cloth instead of a tissue to wipe the screen. You may use a glass cleaner to clean the equipment if required. However, never spray the cleaner directly onto the screen.
- Disconnect the power cable if the equipment is not being used for a long period of time.
- Do not attempt to disassemble or repair the monitor yourself.
- Please remove the protective film on the screen of the product before use.
- When the product is running or turning off, please do not unplug the power adapter.
  - If the adapter is unplugged accidentally, horizontal line noise could occur momentarily.
  - Please run "Image Retention Refresh" if you have the horizontal line noise. (OSD/System Setting/Image Retention Refresh)

PACKAGE CONTENTS

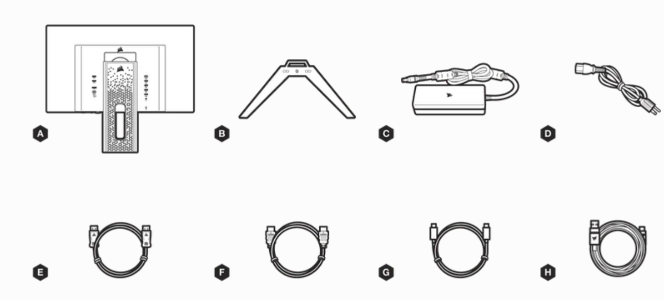

CORSAIR XENEON 27QHD240 OLED DISPLAY CONTENTS

A. CORSAIR XENEON 27QHD240 OLED Display Panel
B. Stand Base
C. AC Adaptor
D. AC Power Cable
E. DisplayPort Cable (1.5M)
F. HDMI Cable (1.5M)
G. USB-C Cable (1.5M)
H. USB-A to USB-C cable (1.8M)

ASSEMBLY

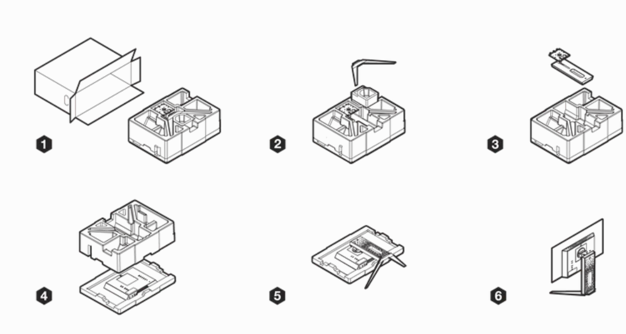

1. Cut the tape on the top of the box, open flaps and lay the box down with the hand cutout opening towards the top. Take hold of hand opening and slide foam out of carton.
2. Remove base and center foam insert.
3. Remove stand neck from the other section of foam packaging.
4. Lift off top section of foam and set aside. This section contains the AC Adapter and accessory cables. The bottom section of foam contains the monitor panel.
5. Align the 3 fingers on the top of the stand neck with the 3 notches in the top section of hte VESA mount section. Angle the 3 fingers into the notches and lower into place until you hear an audible click and it is secure. Notice the push button on the bottom of the connector plate. Press down on this button and lift the stand neck up if you need to remove it in the future. This is where you will mount to a compatible VESA wall or desk mount. Pickup the stand base and align it to the bottom of the stand neck and press it into place. Lift up the key on the captive thumbscrew and turn it clockwise with your fingers until the base is secured to the stand neck.
6. Pick up the monitor by the stand neck and set it upright on your desk. You can now connect it up to your devices.

TILT, SWIVEL, PIVOT, AND HEIGHT ADJUSTMENT

CORSAIR XENEON 27QHD240 OLED features a sturdy and stylish stand that offers several adjustments below down

- Tilt -7/+15 degrees
- Height +/- 100mm

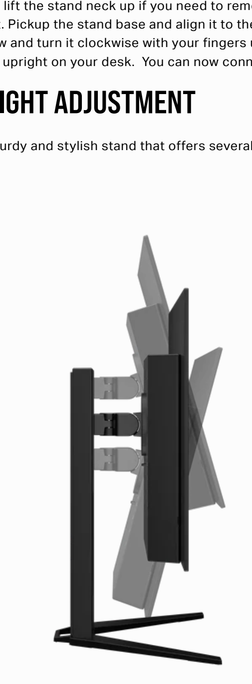

- Swivel +/- 30 degrees

- Pivot +/- 90 degrees

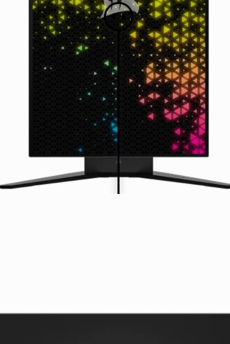

CONNECTIVITY

BACK SIDE

A. HDMI 2.1 – Dual HDMI inputs correspond to "HDMI1" and "HDMI2" inputs
B. DisplayPort 1.4 – DisplayPort input corresponds to "DisplayPort" input
C. USB Type-C Alt DP – Supports DisplayPort Alt Mode and upstream USB input (connects to USB 3.0 ports). Corresponds to "TYPE C" input. This port or the USB Upstream Port must be connected to a USB-capable port on your host device to support downstream USB 3.0 ports.
D. DC In – Connects to included AC adapter
E. USB Type-C IN – Upstream USB input port. This port or the USB Type-C Port must be connected to a USB-capable port on your host device to support downstream USB 3.0 ports.
F. USB 3.1 Type-A – Four Type-A 5Gbps USB 3.1 Gen1 ports
G. 3.5mm Audio Jack – Headset connector for audio output
H. Kensington lock – One security device

BOTTOM SIDE

I. OSD Joystick – For CORSAIR XENEON 27QHD240 OLED OSD selection use
J. Power ON/OFF – Power ON/OFF CORSAIR XENEON 27QHD240 OLED. LED will reactivate if selecting a different input. LED will alternate between White and Amber color when powered off while Image Retention Refresh is running (approximately 4-5 minutes).
K. Input Source Select – Switch through the inputs from the current input to the next one in this cycle: HDMI1, HDMI2, DP, Type-C DP Alt-Mode

PROXIMITY SENSOR FOR OSD LOCATION INDICATOR

Reach your hand here on the front of the unit and there will be a Button Location Indicator popping up on the screen for user's reference. This indicator activates when movement is detected within 25-50mm of the buttons. The indicator will turn off after 5 seconds.

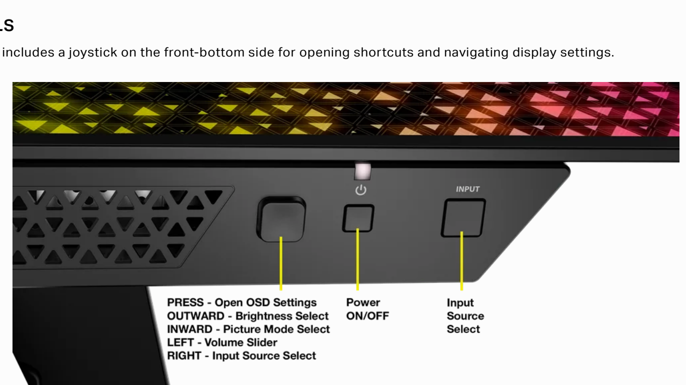

OPERATIONS

CONTROLS

Your monitor includes a joystick on the front-bottom side for opening shortcuts and navigating display settings.

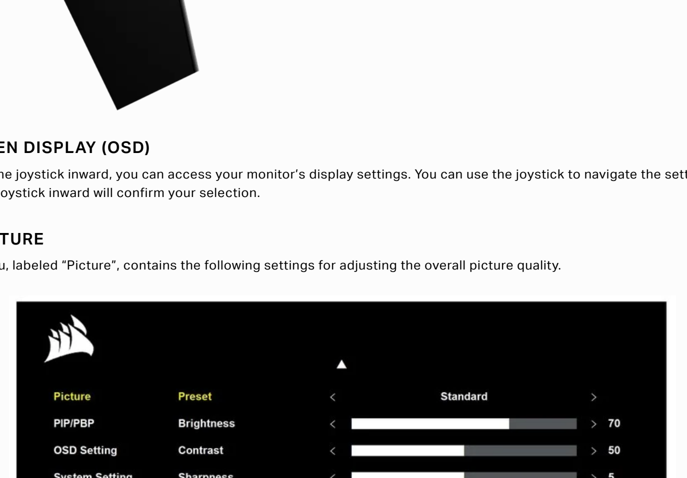

ON-SCREEN DISPLAY (OSD)

By pressing the joystick inward, you can access your monitor's display settings. You can use the joystick to navigate the settings and pressing the joystick inward will confirm your selection.

OSD - PICTURE

The first menu, labeled "Picture", contains the following settings for adjusting the overall picture quality.

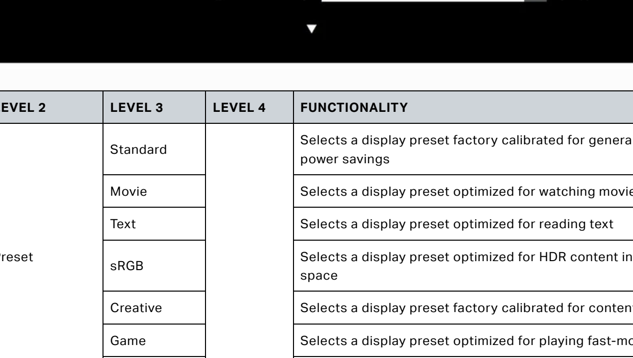

LEVEL 1	LEVEL 2	LEVEL 3	LEVEL 4	FUNCTIONALITY
Picture	Preset	Standard		Selects a display preset factory calibrated for general use and best power savings
		Movie		Selects a display preset optimized for watching movies
		Text		Selects a display preset optimized for reading text
		sRGB		Selects a display preset optimized for HDR content in sRGB color space
		Creative		Selects a display preset factory calibrated for content-creation tasks
		Game		Selects a display preset optimized for playing fast-moving games
		HDR		Only shows when HDR mode is active on connected device
	Brightness	(0-100)		Adjusts the intensity of the display backlight
	Contrast	(0-100)		Adjusts the display's contrast
	Sharpness	(0-10)		Adjusts the display's sharpening filter, increasing edge detail
	Color Temperature	Default		Sets the display's color temperature to default, 8500K
		Standard		Sets the display's color temperature to standard, 6500K
		Warm		Sets the display's color temperature to warm, 5000K
		Custom	R (0-100)	Allows you to manually set the display's color temperature with sliders controlling the red, blue, and green levels
			G (0-100)	
			B (0-100)	
	Gamma	2		Adjusts the perceived luminance; default is 2.2
		2.2		
		2.4		
	Saturation	(0-10)		Adjusts the saturation level; the default is 0
	Refresh Overlay	OFF		Toggles an overlay in the top right corner which displays the monitor's current refresh rate, useful for tracking frames per second when Adaptive Sync is enabled
		ON		
	Crosshair	OFF		Enable Crosshair function
		Dot		
		Cross		
		Angle		
	Crosshair Color	Green		Change Crosshair Color
		Red		

OSD - PIP/PBP (PICTURE-IN-PICTURE / PICTURE-BY-PICTURE)

The second menu, labeled "PIP/PBP", lets you enable the PIP/PBP functions and display different ways.

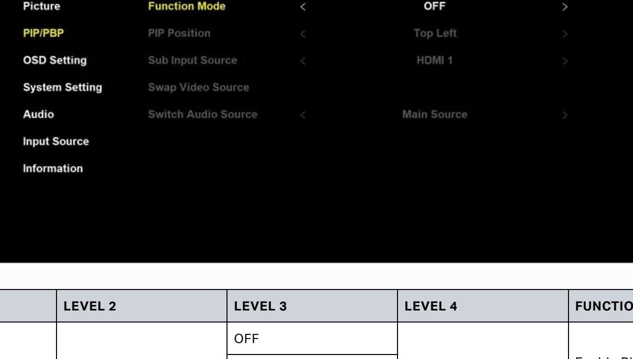

LEVEL 1	LEVEL 2	LEVEL 3	LEVEL 4	FUNCTIONALITY
PIP/PBP	Function Mode	OFF		Enable PIP or PBP function
		PIP		
		PBP		
	PIP Position	Top Left		Place sub input source at top left side
		Top Right		Place sub input source at top right side
		Bottom Left		Place sub input source at bottom left side
		Bottom Right		Place sub input source at bottom right side
	Sub Input Source	HDMI 1		Select sub input source
		HDMI 2		
		Display Port		
		Type C		
	Swap Video Source			Swaps video source between main picture and sub picture

	Switch Audio Source	Main Source		Change audio source between main source and sub source
		Sub Source		

OSD - OSD SETTING

The third menu, labeled "OSD Setting", contains the following settings for adjusting the display's internal settings.

LEVEL 1	LEVEL 2	LEVEL 3	LEVEL 4	FUNCTIONALITY
OSD Setting	Language	简体中文		Selects the OSD's language
		English		
		Français		
		Deutsch		
		Italiano		
		日本語		
		한국어		
		Português		
		Español		
	Transparency	OFF		Sets the OSD to be transparent or opaque
		ON		
	Time Out	10-60		Adjusts how long (in seconds) the OSD stays on screen before disappearing

OSD - SYSTEM SETTINGS

The fourth menu, labeled "System Setting", lets you make adjustments to the system settings.

LEVEL 1	LEVEL 2	LEVEL 3	LEVEL 4	FUNCTIONALITY
System Setting	Aspect Ratio	Auto		Selects the display's aspect ratio. "Auto" will try to match the display's aspect ratio to the incoming video signal
		Full		
	Adaptive Sync	OFF		Enables or disables the adaptive sync functionality when connected to a compatible GPU. Select ON to enable Adaptive Sync for AMD FreeSync via HDMI. NVIDIA G-Sync compatibility is available when connected via DP cable or USB Type-C A4 Mode cable to compatible GPU. For NVIDIA G-Sync functionality: • Install/Open NVIDIA Control Panel • Select "Set up G-Sync" • Select "Enable G-Sync Compatible" checkbox • Select "Apply" button • Select the "Enable settings for the selected display model" checkbox. May require a system reboot to access NVIDIA settings
		ON		
	Image Retention Refresh	Start Refresh		Start the Image Retention Refresh process which will run for approximately 4-5 minutes. When activated, screen will blank and the refresh process will alternate between white and amber color while the monitor refreshes the screen
		Stop Refresh		
	Orbit	OFF		Enable the Orbit function. While activated, the image shifts 1 pixel per minute in a circular pattern to prevent image retention.
		ON		
	Brightness Stabilizer	OFF		Enable the Brightness Stabilizer function. When active, brightness will be limited to 150nits.
		ON		
	Source Detection	Auto		Determines whether the display will automatically switch to a different input if it detects a signal, or if you will need to manually switch between inputs
		Manual		
	USB-C A4 Mode	4 Lane		Toggles the number of USB lanes to use on the USB-C port for video: • 4 Lane Mode allows up to 2560 x 1440 @ 240Hz resolution but reduces USB Type-A and USB Type-C data to USB 2.0 • 2 Lane Mode allows for up to 2560 x 1440 @ 60Hz but enables USB Type-A & USB Type-C 3.0 speed
		2 Lane		
	Factory Reset	OFF		Resets all monitor settings to the factory defaults

OSD - AUDIO

The fifth menu, labeled "Audio", lets you control the display's audio.

LEVEL 1	LEVEL 2	LEVEL 3	LEVEL 4	FUNCTIONALITY
Audio	Volume	0-100		Adjusts the volume of the audio output from the headphone jack

OSD - INPUT SOURCE

The sixth menu, labeled "Input Source", lets you switch between the display's different inputs.

LEVEL 1	LEVEL 2	LEVEL 3	LEVEL 4	FUNCTIONALITY
Input Source	HDMI 1			Switches to the device connected to the HDMI-1 port
	HDMI 2			Switches to the device connected to the HDMI-2 port
	DisplayPort			Switches to the device connected to the "DP" DisplayPort port
	Type-C			Switches to the device connected to the TYPE-C port

OSD - INFORMATION

The seventh menu, labeled "Information", provides you monitor information.

LEVEL 1	LEVEL 2	LEVEL 3	LEVEL 4	FUNCTIONALITY
Information	Source			Display the current input source
	Resolution			Display the current display resolution
	Refresh Overlay			Display the current refresh rate
	Adaptive Sync			Adaptive Sync Status
	HDR			HDR status
	FW Version			Shows the current FW Version

VESA MOUNT COMPATIBILITY

1. Remove Stand Base by pressing down on hook button underneath the neck hinge.
2. Lift up and remove the stand.
3. Attach compatible 100mm x 100mm VESA mount after ensuring weight and size support.

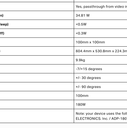

FAQ

Power LED not on

No image on the screen

Image too light/dark

Video Signal Not Supported

Does the CORSAIR XENEON 27QHD240 OLED support video over USB-C?

I'm unable to use devices connected to the USB-B ports on my monitor when connected to my device that supports USB-C Alt Mode using a single USB-C cable.

Image is stretched/squished

Image has color issues

Artifacts in onscreen image

Monitor has a dead pixel

What kind of VESA mount is compatible?

My CORSAIR XENEON 27QHD240 OLED monitor isn't detected by CORSAIR iCUE

What adaptive refresh rate options are available to CORSAIR XENEON 27QHD240 OLED?

AMD FreeSync / G-SYNC isn't enabled

I'm not getting the monitor's rated 240Hz refresh rate

APPENDIX

TABLE 1: TECHNICAL SPECIFICATIONS

Product Name	CORSAIR XENEON 27QHD240 OLED
Part Number	CM-9030001
Device	9030003
USB Hub ID	CORSAIR USB 3.1 Hub
Panel Size	27" Diagonal
Display Surface	Non-Glare
Pixels per inch	109
Aspect Ratio	16:9
Native Resolution	2560 x 1440 @ 240Hz
Response Time (GtG)	0.03ms
Display Colors	1.07B colors (10bit RGB)
Panel Technology	OLED
Flicker-Free	Yes
Viewing Angles	178° (H) / 178° (V)
Peak Brightness	450 cd (SDR) / 1000 cd (HDR 2%)
Static Contrast Ratio	1,500,000:1
HDR Certification	HDR with 1000 cd peak brightness
Color Gamut (CIE 1976)	99.5% (DCI-P3), 100% (sRGB)
Variable Refresh Rate	NVIDIA G-Sync Compatible Certified AMD FreeSync Certified
HDMI Input	2x HDMI 2.1
DisplayPort Input	1x DisplayPort 1.4
USB-C Input	1x DisplayPort 1.4 (USB-C Alt Mode), 65W Power Delivery, USB 5Gbps Data Upstream
USB-C Upstream Input	1x 5Gbps USB-C with 15W Power Delivery
USB-A Output	4x 5Gbps Type-A USB Type-A 3.1 gen1
3.5mm Audio	Yes, pass/through from video input
Power Consumption (On)	34.61 W
Power Consumption (Sleep)	<0.5W
Power Consumption (Off)	<0.3W
VESA Compatibility	100mm x 100mm
Dimensions (W x H x D)	624.4mm x 535.8mm x 224.3mm
Weight	8.0kg
Stand Tilt	-7/+10 degrees
Swivel	+/- 30 degrees
Pivot	+/- 90 degrees
Height Adjust Range	100mm
AC Adapter	180W
	Note: your device uses the following power supply: Delta ELECTRONICS Inc. / ADP-180TB HC

TABLE 2: SUPPORTED DISPLAY MODES

Resolution			Refresh Rate	HDMI	DP / Type-C
640x480	VGA	VGA	60Hz	V	V
			67Hz	V	V
			72Hz		
			75Hz		
720x400	Dos Mode		70Hz	V	V
800x600	SVGA	SVGA	56Hz	V	V
			60Hz	V	V
			72Hz	V	V
			75Hz	V	V
1024x768	XGA	XGA	60Hz	V	V
			70Hz	V	V
1152x870	XGA+	XGA+	75Hz	V	V
1280x720	WXGA	WXGA	60Hz	V	V
1280x800	WXGA	WXGA	60Hz	V	V
1280x960	WXGA	WXGA	60Hz	V	V
1280x1024	SXGA	SXGA	60Hz	V	V
			75Hz	V	V
1440x900	WXGA+	WXGA+	60Hz	V	V
1680x1050	WSXGA+	WSXGA+	60Hz	V	V
1920x1080	FHD	FHD	60Hz	V	V
			240Hz	V	V
2560x1440	QHD	QHD	50Hz	V	V
			60Hz	V	V
			120Hz	V	V
			240Hz	V	V
480P	640x480p @ 60 Hz 4:3			V	V
	720x480p @ 60 Hz 16:9			V	V
576P	720x576p @ 50 Hz 16:9			V	V
720P	1280x720p @ 50 Hz 16:9			V	V
	1280x720p @ 60 Hz 16:9			V	V
1080P	1920x1080p @ 24 Hz 16:9			V	V
	1920x1080p @ 25 Hz 16:9			V	V
	1920x1080p @ 30 Hz 16:9			V	V
	1920x1080p @ 50 Hz 16:9			V	V
	1920x1080p @ 100 Hz 16:9			V	V
	1920x1080p @ 120 Hz 16:9			V	V
	1920x1080 @ 50 Hz 16:9			V	V
	1920x1080 @ 60 Hz 16:9			V	V
2160P	3840x2160p @ 24 Hz 16:9			V	
	3840x2160p @ 25 Hz 16:9			V	
	3840x2160p @ 30 Hz 16:9			V	
	3840x2160p @ 50 Hz 16:9			V	
	3840x2160p @ 60 Hz 16:9			V	
	3840x2160p @ 100 Hz 16:9			V	
	3840x2160p @ 120 Hz 16:9			V	

ABOUT LOW BLUE LIGHT & FLICKER FREE

- The monitor should be 50 – 70 cm (20 – 28 inches) away from your eyes.
- Staring at a bright light or bright image for long periods of time may deteriorate your eyesight.
- Rest your eyes for 5 – 10 minutes for every 1 hour of product use.
- Reduce your eye strain by focusing on objects far away.
- Blinking frequently and looking at things far away will dry out.

* The Monitor uses a low blue light panel and complies with TÜV Rheinland Low Blue Light Hardware Solution at factory reset/default setting (Color 20 Brightness 110, Contrast 50%, CCT Normal, Preset mode: Standard.)

HDMI LEGAL DISCLOSURE

The Bluetooth Trademarks HDMI, HDMI High-Definition Multimedia Interface, and the HDMI Logo are trademarks or registered trademarks of HDMI Licensing Administrator, Inc. in the United States and other countries.

The terms HDMI, HDMI High-Definition Multimedia Interface, and the HDMI Logo are trademarks or registered trademarks of HDMI Licensing Administrator, Inc.

Copyright © 1995 - 2026 CORSAIR. All rights reserved. | Terms of Use | Privacy Policy | Cookie Settings | Sitemap